MULTI Rail

Railway catering equipment

MULTI Atlas

A7LT

FREEZER

Modular freezer
for railway catering
on-board service

www.multi-rail.com

MULTI Atlas

A7LT

FREEZER

- *Designed to withstand High Speed Train structure dynamic stress*
- *Well tried and tested on High Speed Trains*
- *Interchangeable with other MultiAtlas serie equipments*
- *Quick and easy installation and removal*

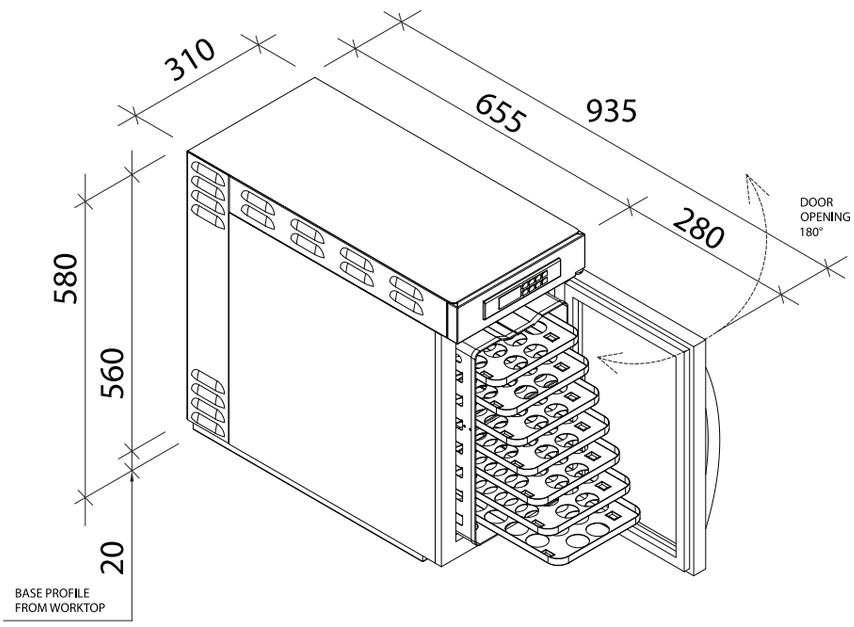

TECHNICAL FEATURES

POWER SOURCE	AC 230 V 50/60 Hz DC 24 V
POWER CONSUMPTION	265 W
MEALS	32
NET CAPACITY	40 Lt
WORKING TEMPERATURE	-20°C / -12°C
WEIGHT	33 kg
GAS	HFC

CE | EN 61373

MULTI RAIL S.r.l.
Italy 31013 Cimavilla di Codognè (TV) via del Lavoro 30 | tel: +39 0438 470799 email: info@multi-rail.com **www.multi-rail.com**