Zoppas Industries

Heating Element Technologies

ELECTRICAL PRE-HEATERS FOR GAS AND DIESEL ENGINES

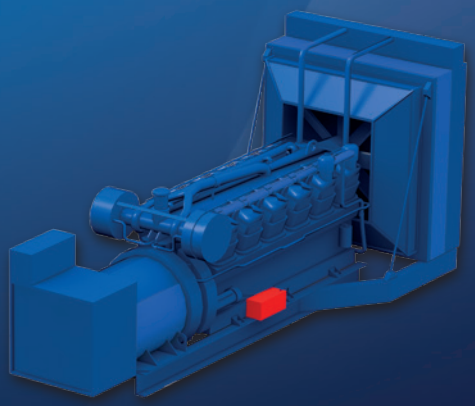

Zoppas Industries
Heating Element Technologies

ELECTRICAL PRE-HEATERS FOR GAS AND DIESEL ENGINES

For more than 30 years Zoppas Industries has supplied to its customers a wide range of electric pre-heating units for water jacket cooling systems for diesel and gas engines. By utilizing Zoppas Industries' preheating units, the typical problems associated with cold starts can be avoided and the engine can be brought to full power immediately.



- 30 years of field experience
- 30 years of approval testing
- Standardized components
- Designed for easy maintenance
- Wide range of approvals

APPLICATIONS

Electric pre-heating units are used as heating systems for high-, medium- and low speed, water-cooled combustion engines. Typical applications are stationary and mobile emergency generators, instant usable gen-sets for use on land or ship, locomotives, mining equipment and large construction vehicles.



Gen-sets



Power plants

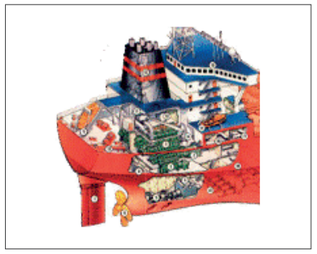

Marine



Machinery



Railway

WORKING PRINCIPLE

The pre-heater operates by recirculating the fluid in the water jacket cooling system to maintain the temperature when the engine is being operated at a minimal load or after an engine shutdown to bring the temperature up to operating level.

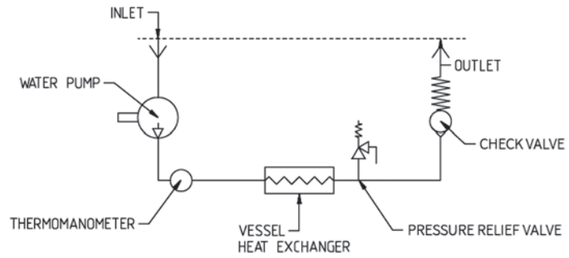

DESIGN

1 Main body (vessel and control panel support)
2 Electric screw-plug heating element (s)
3 Check valve
4 Circulating pump
5 Control panel with electrical control and safety devices
6 Temperature control with integrated high limit
7 Pressure relief valve (optional)
8 Thermomanometer (optional)

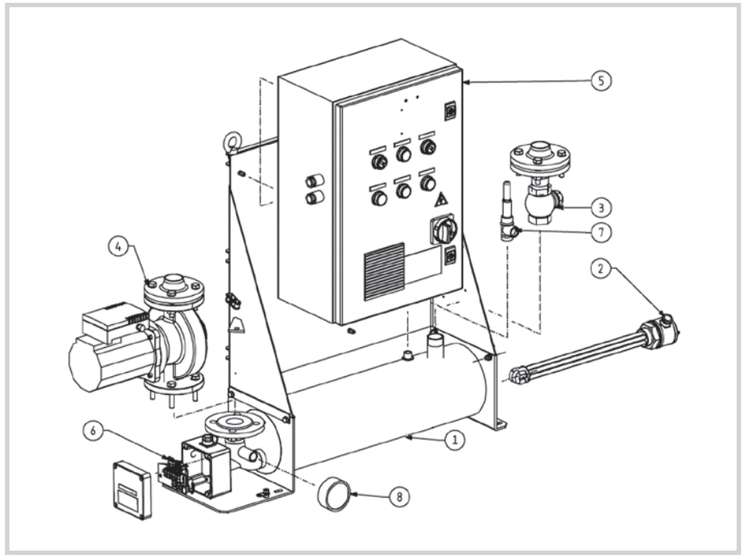

All operational and assembly parts of the preheating-units are easily accessible and replaceable. The pre-heating units do not need special maintenance. Pre-heating units are available with the circulating pump mounted on either the right or left-hand side to suit the installation.

MARINE APPROVALS

The following marine approvals are available on customer request.

BUREAU VERITAS · RINA · PRS · DNV · ABS · Lloyd's Register · GL · CCS 中国船级社 CHINA CLASSIFICATION SOCIETY

Zoppas Industries
Heating Element Technologies

Engine Preheaters MAXYe

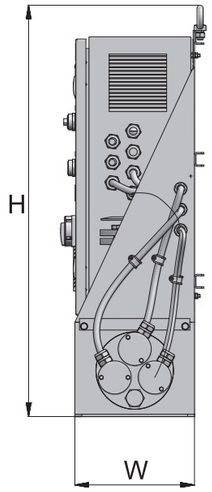

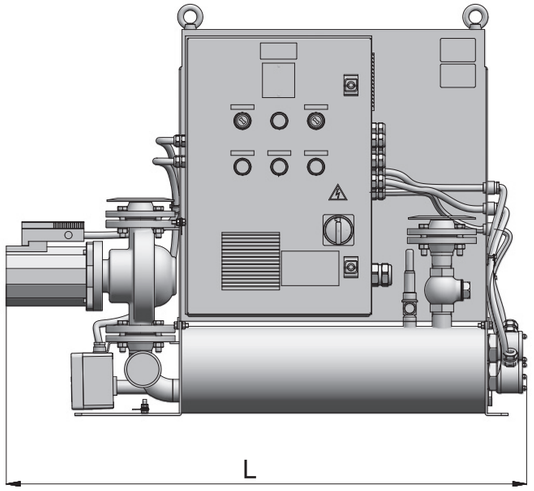

Main Electrical Data:

Nominal heating power		See Models Table (pg. 4)				
Nominal voltage	Standard	380 V - 415 V			440 V	
	Special (on customer request)	220 V	480 V	600 V	690 V	
Phase		3				
Frequency		50 Hz				
		60 Hz				

Main Features:

Heated fluid	water/glycol	
Maximum allowable glycol content	50%	
Regulation preheating temperature	range:	60-80°C (140-176°F)
	factory pre-set	65°C (149°F) (other pre-set according to customer request)
Safety thermostat set-point	98°C +0-8°C (208°F +0-14°F)	
Ambient temperature range	0-50°C (32-122°F)	
Max relative ambient humidity	90%	
Operating pressure	max 6 bar (87 psi)	
Design pressure	6.85 bar (99.35 psi)	
Test pressure	12 bar (174 psi)	
Maximum h.e. power density	9.6 W/cm² (63 W/in²)	
Hydraulic features	Check valve at water outlet	
Safety valve	¾" safety relief valve, brass; 6.85 bar (99.35 psi) factory pre-set value	
Protection level	IP44	
Materials	Vessel and structure: carbon steel, painted RAL 5019	
Phase	3	

Pump:

Pump type	centrifugal pump with separated electrical motor
Material	casing and impeller in cast iron G 20, painted
Impeller	dynamically balanced with wide ports to allow free water flowing when pump is off
Mechanical seal	carbon-ceramic with Viton O-rings
Motor	IP 55 protection class, insulation Class F, max ambient temp. 55°C (131°F)
Max liquid temperature	100°C (212°F)
Pump flow	See Models Table (pg. 4)

Control Cabinet:

Protection level	IP44
Material	carbon steel, painted
Painting	RAL 7035
Panel Indicators	Power supply Pump operation Heating element operation

OPERATING MODALITY	LOCAL	REMOTE
Main ON/OFF	√	√
Main isolation switch	√	
Power steps selector	√	

SIGNALS/ALARMS	LOCAL	REMOTE
General fault alarm	√	√
Heating element operation	√	
Pump operation	√	

	MAIN ELECTRICAL DATA			VESSEL		OVERALL DIMENSIONS			INTERFACE	PUMP
Layout	nom. power [kW]	no. of heating elements	power steps [kW]	Ø NB [in]	length [mm]	length [mm]	height [mm]	width [mm]	Hydraulic connection	Nominal performance
	12	2	6/12	6	670	1130	894	260	DN40 PN10	12m³/h @10m
	18	3	6/12/18	6	670	1130	894	260	DN40 PN10	12m³/h @10m
	27	3	9/18/27	6	760	1230	894	260	DN40 PN10	12m³/h @10m
	36	3	12/24/36	6	760	1230	894	260	DN40 PN10	12m³/h @10m
	54	6	18/36/54	10	760	1250	1020	320	DN40 PN10	12m³/h @10m
	72	6	24/48/72	10	1100	1570	1020	320	DN40 PN10	12m³/h @10m
	96	4	48/72/96	10	1340	1820	992	320	DN40 PN10	12m³/h @10m
	120	5	48/96/120	14	1820	2535	1600	550	DN50 PN10	25m³/h @10m
	144	6	48/96/144	14	1820	2535	1600	550	DN50 PN10	25m³/h @10m
	180	6	60/120/180	14	1820	2655	1600	550	DN65 PN10	40m³/h @10m
	216	8	81/162/216	14	1820	2535	1800	550	DN65 PN10	40m³/h @10m
	252	8	94.5/189/252	16	1820	2535	1800	550	DN65 PN10	40m³/h @10m
	288	9	96/192/288	16	1820	2600	1800	550	DN80 PN10	50m³/h @13m

Zoppas Industries
Heating Element Technologies

Engine Preheaters MIDIe

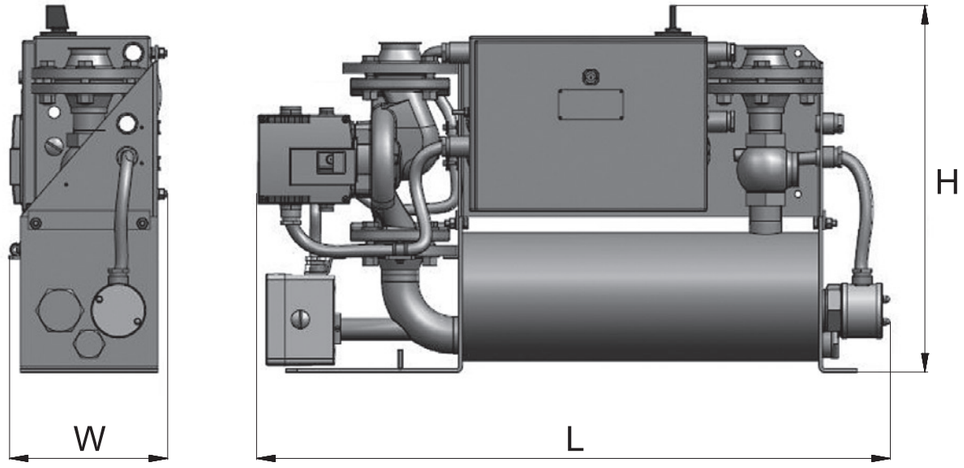

Main Electrical Data:

Nominal heating power		See Models Table (pg. 4)				
	Standard	230 V	400 V	440 V		
	Special (on customer request)	220 V	380 V	415 V		
Phase		1,3				
Frequency		50 Hz				
		60 Hz				

Main Features:

Heated fluid	water/glycol	
Maximum allowable glycol content	50%	
Regulation preheating temperature	range:	60-80°C (140-176°F)
	factory pre-set	65°C (149°F) (other pre-set according to customer request)
Safety thermostat set-point	98°C +0-8°C (208°F +0-14°F)	
Ambient temperature range	0-45°C (32-122°F)	
Max relative ambient humidity	90%	
Operating pressure	max 4.5 bar (65 psi)	
Design pressure	6 bar (87 psi)	
Test pressure	6 bar (87 psi)	
Maximum h.e. power density	10.0 W/cm^2 (63 W/in^2)	
Hydraulic features	Check valve at water outlet	
Safety valve	Not included	
Protection level	IP44	
Materials	Vessel and structure: carbon steel, painted RAL 7035	

Pump:

Pump type	Circulation pump with wet running asynchronous 2-pol motor
Material	pump-housing: EN-GJL-250 shaft - X40Cr13
Impeller	PPN 50% glasfiber
Mechanical seal	Viton
Motor	IIP 55 protection class, insulation Class H
Liquid temperature range	-20°C - +130°C (-4°F - +266°F)
Pump flow	See Models Table (pg. 4)

Control Cabinet:

Protection level	IP44
Material	carbon steel, painted
Painting	RAL 7035
Panel Indicators	Power supply Heating element operation General fault

OPERATING MODALITY	LOCAL	REMOTE
Main ON/OFF	√	√
Main isolation switch	√	
Power steps selector	√	

SIGNALS/ALARMS	LOCAL	REMOTE
General fault alarm	√	
Heating element operation	√	
Pump operation		

	MAIN ELECTRICAL DATA			VESSEL		OVERALL DIMENSIONS			INTERFACE	PUMP
Layout	nom. power [kW]	no. of heating elements	power steps [kW]	Ø NB [in]	length [mm]	length [mm]	height [mm]	width [mm]	Hydraulic connection	Nominal performance
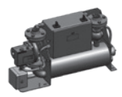	4.5	1	4.5	6	480	850	485	200	DN40 PN6	4m^3/h @3m
	6	2	3/6	6	480	850	485	200	DN40 PN6	4m^3/h @3m
	9	2	4.5/9	6	480	850	485	200	DN40 PN6	4m^3/h @3m
	12	2	6/12	6	480	850	485	200	DN40 PN6	4m^3/h @3m
	18	3	6/12/18	6	670	1020	485	200	DN40 PN6	4m^3/h @3m
	24	3	8/16/24	6	670	1020	485	200	DN40 PN6	4m^3/h @3m

Engine Preheaters SMALL

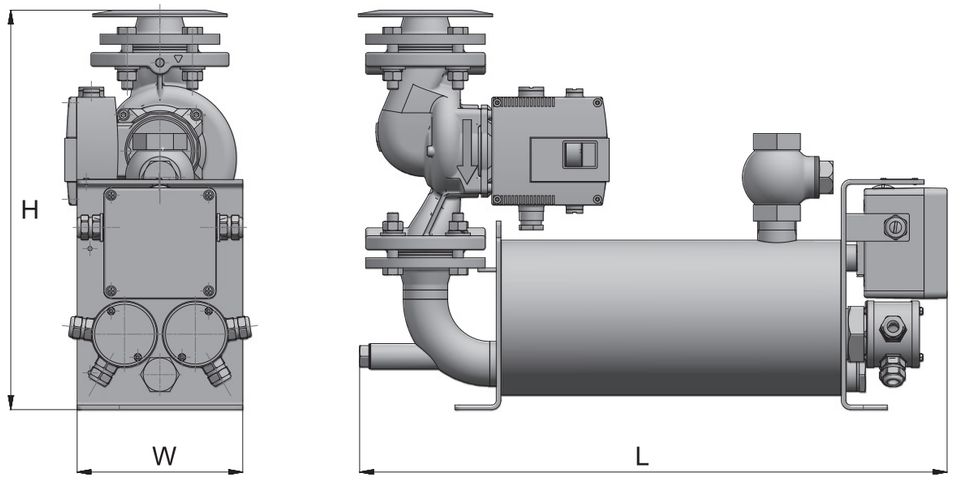

Main Electrical Data:

Nominal heating power		See Models Table (pg. 4)				
	Standard	230 V	400 V	440 V		
	Special (on customer request)	220 V	380 V	415 V		
Phase		1,3				
Frequency		50 Hz				
		60 Hz				

Main Features:

Heated fluid	water/glycol	
Maximum allowable glycol content	50%	
Regulation preheating temperature	range:	60-80°C (140-176°F)
	factory pre-set	65°C (149°F) (other pre-set according to customer request)
Safety thermostat set-point	98°C +0-8°C (208°F +0-14°F)	
Ambient temperature range	0-45°C (32-122°F)	
Max relative ambient humidity	90%	
Operating pressure	max 4.5 bar (65 psi)	
Design pressure	6 bar (87 psi)	
Test pressure	6 bar (87 psi)	
Maximum h.e. power density	10.0 W/cm^2 (63 W/in^2)	
Hydraulic features	Check valve at water outlet	
Safety valve	Not included	
Protection level	IP55	
Materials	Vessel and structure: carbon steel, painted RAL 7035	

Pump:

Pump type	Circulation pump with wet running asynchronous 2-pol motor
Material	pump-housing: EN-GJL-250 shaft - X40Cr13
Impeller	PPN 50% glasfiber
Mechanical seal	Viton
Motor	IIP 55 protection class, insulation Class H
Liquid temperature range	-20°C - +130°C (-4°F - +266°F)
Pump flow	See Models Table (pg. 4)

	MAIN ELECTRICAL DATA			VESSEL		OVERALL DIMENSIONS			INTERFACE	PUMP
Layout	nom. power [kW]	no. of heating elements	power steps [kW]	Ø NB [in]	length [mm]	length [mm]	height [mm]	width [mm]	Hydraulic connection	Nominal performance
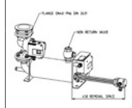	4.5	1	4.5	6	370	640	435	200	DN40 PN6	4m^3/h @3m
	6	2	3/6	6	370	640	435	200	DN40 PN6	4m^3/h @3m
	9	2	4.5/9	6	370	640	435	200	DN40 PN6	4m^3/h @3m

Your global strategic partner

Zoppas Industries
Heating Element Technologies



60
Years of experience

>8000
Employees of the group

15
Countries with **offices**

Why to choose us

- Increasing efficiency using lean enterprise across all facilities and departments.
- State-of-the-art laboratory facilities with over 30 years' design experience.
- Manufacturing and design facilities which maintain Quality Management Systems according to ISO 9001, EN 9100 and IATF 16949, Environmental Management System according to ISO 14001 and Energy Management System according to ISO 50001.
- One of the widest product portfolios in the World, including completely integrated thermal assemblies with sensors, connectors, enclosures, etc.
- Global presence through design and manufacturing facilities across Europe, North America, South America and Asia - lowering your Total Cost of Ownership (TCO) including reduced logistics, design, communication and support costs.
- In-house design, development and R&D capabilities, such as CAD 3D design, FEA, DOE, FMEA.
- Third-party certifications, such as UL and VDE: marking applied on customer's request.



COMPANY CERTIFICATIONS

IT-75.12-6975 12/054P_IND EN 15085-2

IT-75.12-6975 12/055P_IND ISO 3834-3

9191.IRCR 9196.IRC8

PRODUCT TRADEMARKS

Compliance with the mark of each specific product must be properly reviewed with our Sales Department.

NOTE:



ZIHET reserves the right to make changes without prior notice: all the specifications may be subject to change

cod. 690156384 - 0824

Zoppas Industries

Heating Element Technologies

Via Podgora, 26
31029 Vittorio Veneto (TV) - Italy
Phone: +39 0438 9101
marketing@zoppas.com
www.zoppasindustries.com